Pressure booster with/without ”third hand” function (DHF)

STARK

The pressure booster converts air pressure into hydraulic pressure for all ranges between 30 and 110 bar.
The pressure booster is available with or without ”third hand” function (DHF). A hydraulic hose of 1,5 m lenght is included in the delivery (other hose length available on request).

Pressure booster with ”third hand” function (DHF) - clink on, release and clamping

Pressure boosters with ”third hand” function (DHF) keep the workpiece or pallet in the engaged position after positioning. Workpiece and pallet are thus secured against falling out and no longer need to be held by the operators. The clamping process can be performed more rapidly and more safely.

Existing pressure boosters without ”third hand” function (DHF) can be rapidly and straightforwardly upgraded using a conversion kit. The upgrade can be performed on your premises or in our service centre.

NEW

Outstanding advantages on vertical, horizontal and ”overhead” clamping

- Can be upgraded to all systems
- Increased safety during clamping
- Secures pallets and jigs against falling out
- Simple depositing of pallets or workpiece clamping using robots:
  move in - engage - release
- Overhead workpiece clamping possible
- Pre-adjustable retention and clamping pressure
- User-friendly
- Not necessary to apply force when removing the jig
- Can also be realised using the machine functions

Mounting made easy

1 Clink on the palette
2 Release the palette
3 Clamp
4 Process the workpiece
5 Change the palette

Stark Spannsysteme GmbH, A-6840 Götzis,
E-mail: verkauf@stark-inc.com, Tel. +43 (0)5523 64739-0, Fax +43 (0)5523 64739-7

Pressure booster 30 - 110 bar

Pressure booster RECORD 40 bar (oil volume 0,31 l)

Order no.	releases max. [pcs]	system pressure [bar]	air pressure [bar]
804 411	14 SPEEDY, 6.722 N	40	6
	7 SPEEDY, 20.000 N	40	6
804 418	14 SPEEDY, 6.722 N, with DHF	40	6
	7 SPEEDY, 20.000 N, with DHF	40	6

Pressure booster RECORD 80 bar (oil volume 0,148 l)

Order no.	releases max. [pcs]	system pressure [bar]	air pressure [bar]
804 412	7 SPEEDY, 10.000 N	80	6
804 429	7 SPEEDY, 10.000 N, with DHF	80	6

Pressure booster KOLOSS 40 bar (oil volume 0,8 l)

Order no.	releases max. [pcs]	system pressure [bar]	air pressure [bar]
804 413	36 SPEEDY, 6.722 N	40	6
	18 SPEEDY, 20.000 N	40	6
	6 SPEEDY, 30.000 N	30	4,5
804 431	36 SPEEDY, 6.722 N, with DHF	40	6
	18 SPEEDY, 20.000 N, with DHF	40	6
	6 SPEEDY, 30.000 N, with DHF	30	4,5

Pressure booster KOLOSS 110 bar (oil volume 0,29 l)

Order no.	releases max. [pcs]	system pressure [bar]	air pressure [bar]
804 414	12 SPEEDY, 10.000 N	80	6
804 430	12 SPEEDY, 10.000 N, with DHF	80	6

For SPEEDY 1000 mit 10.000 N retraction force should be reduced to 4,6 bars. This results in a hydraulic pressure of 80 bars.

Treadle to pressure booster (replaces manual operation)

Order no.	Description
804 419	Treadle to pressure booster
	incl. pneumatic hose and connections

Third Hand function controls

Order no.	Description
804 428	The Third Hand function controls are in the housing with the ratchet foot pedal
	incl. pneumatic hose

Stark Spannsysteme GmbH, A-6840 Götzis,
E-mail: verkauf@stark-inc.com, Tel. +43 (0)5523 64739-0, Fax +43 (0)5523 64739-7

STARK

Hydraulic clamping pump

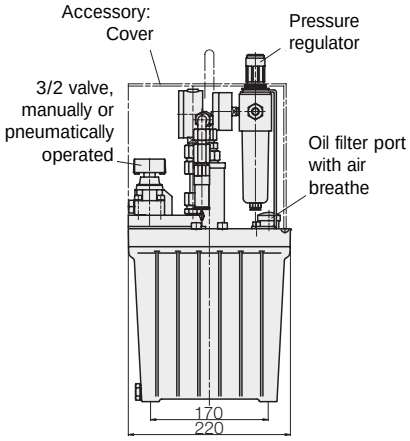

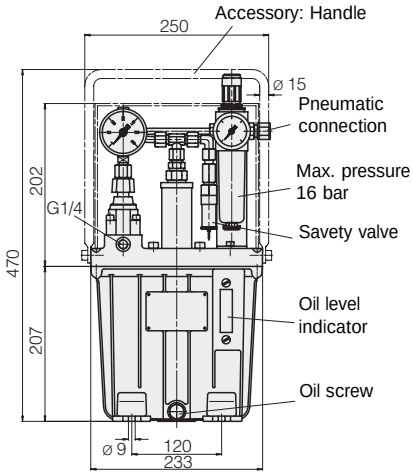

Application

The hydraulic clamping pump is particulary suitable for small to medium-sized clamping and mounting devices having single-acting cylinders which operate primarily by intermittence (pressure build-up and pressure holding). As the power supplied is compressed air, they can be used without restriction in hazardous surroundings.

Description

The tandem plunger pump is built into the oil reservoir in a space-saving manner. It operates with oscillating movements and automatic stroke reversal control by a pilot-operated 4/2 valve. The stroke frequency, and consequently the delivery flow rate depend on the air pressure and the hydraulic counterpressure.

13

Delivery flow rate without counterpressure

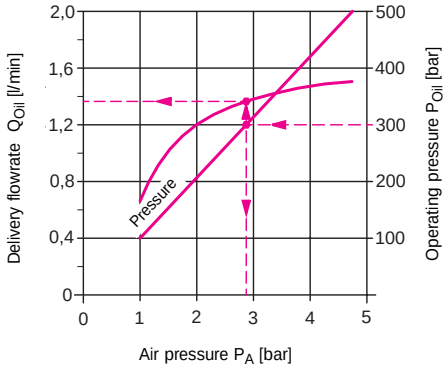

Example:

To get the operating pressure P_{oil} = 300 bar, an air pressure of P_A = 2.8 bar is set on the pressure regulator. The delivery flow rate Q_{oil} without counterpressure is 1.35 l/min.

Control variants

Hand-operated 3/2 valve

This valve is equipped with a turning handle for direct operation on the unit.

Pneumatically operated 3/2 valve

This valve is mounted on the unit allowing for pneumatic remote control which, however, requires an additional pilot valve (accessory). According to the length of the pneumatic piping between both valves, there is a longer or shorter time delay for the clamping and unclamping operation.

Without valve (for remote control)

This type is designed for external valve control connected with a pressure and return line each. The clamping pump keeps the set pressure constant.

A valve must never be used for depressurized circulation as the pump only serves for intermittent operation

Technical data

Max. delivery flow rate	[cm³/s]	25
	[l/min]	1,5
Max. operating pressure	[bar]	500
Min. operating pressure	[bar]	100
Max. air pressure	[bar]	4,7
Min. air pressure	[bar]	1,0
Transmission ratio		1:108
Max. air consumption	[l/min]	1200
Min. control pressure for pneumatic valve	[bar]	3
Max. charge	[l]	4,0
Usable oil volume	[l]	1,8
Viscosity range	[m²/s]	10...500
Recomm. viscosity grade as per DIN 51519	ISO VG 22	
Recomm. hydraulic oil as per DIN 51524		HLP 22
Noise level	[dBA]	78
Weight	[kg]	20

Delivery circuit

The units are delivered complete and ready for connection. On the pneumatic side there is a service unit with pressure reducer, filter and oiler. An additional pressure relief valve prevents increase of pressure over 4.8 bar, and thus operating pressures over 500 bar on the hydraulic side.

	Order no.
Pump with hand-oper. valve	**8600-110**
Pump with pneumatic valve	**8600-111**
Pump without valve	**8600-112**

Accessories

Handle	**0353-217**
Cover	**0353-714**

Accessories for remote control of 8600-112

Hand lever valve with catch	**3812-005**
Sound absorber for hand lever valve	**3887-015**
Foot valve with catch incl.	**0381-206**
Air hose NW 6	**3890-059**
Screwed socket G1/4	**3890-071**
Hose clamp	**3890-076**

Example for ordering

Pump with hand-operated valve	**8600-110**
Handle	**0353-217**
Cover	**0353-714**

Stark Spannsysteme GmbH, A-6840 Götzis,
E-mail: verkauf@stark-inc.com, Tel. +43 (0)5523 64739-0, Fax +43 (0)5523 64739-7

STARK

Pumping set, electric

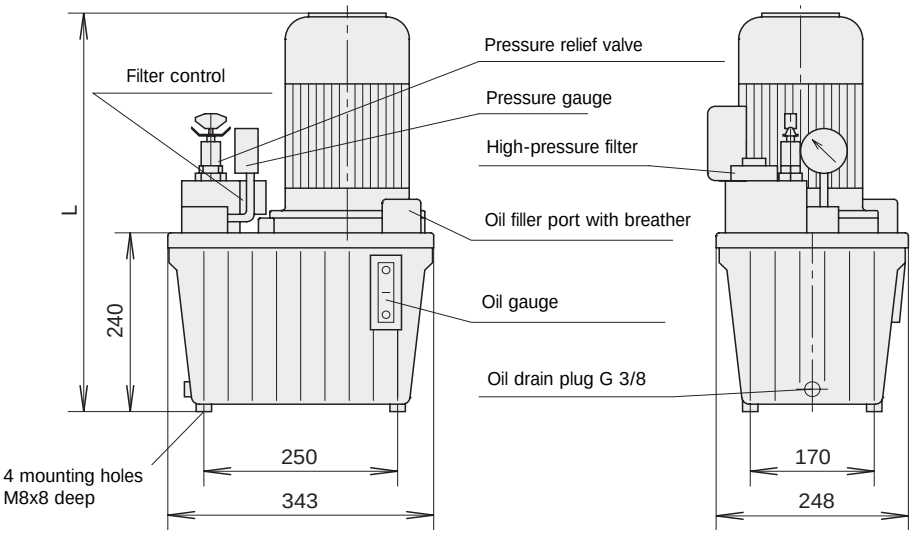

General characteristics

Design:	81XX-gear pump 82XX-radial piston pump 8223-323 two-stage hydraulic pump
Mounting:	foot mounting
Porting:	G1/4
Direction of rotation:	radial piston pump - any gear pump - clockwise two-stage hydraulic pump - counterclockwise (viewed from above onto drive shaft)
Mounting position:	upright
Reservoir volume:	V = 11 l
Usable oil volume:	Vn = 6 l

Hydraulic characteristics

Vol. efficiency:	h vol = 85-95% with gear pumps h vol = 92-96% with radial piston pumps

Accessories

The power units can be supplied, on request, with solenoid operated directional control valves as per data sheet C 2.360 ND4 and C2.530 ND6, which are fixed to the power unit on a mounting plate.

The valves have to be ordered separately. The mounting plate for the pressure switch as per catalogue is available on request.

Electrical characteristics

Nominal voltage:	230/400 V
Power system:	3-phase AC, 50 Hz
Degree of protection:	IP 54
Rel. duty cycle (ED):	Depends on operating pressure. For details of 100% and 40% ED see table.

The calculation of the relative duty cycle is based on a cycle of 10 min. With 40% ED, e.g. the maximum load within the cycle should not exceed 4 min. During the remaining time the motor can carry a load of up to 50% of the nominal output and should run continuously.

Different types on request.

Note on figure and hydraulic circuit diagram
The pressure switch, oil level and temperature control and filter control shown in the above figure are not supplied with the pumping set.

Oil level and temperature control
Order no. **3822-008**

Hydraulic circuit diagram

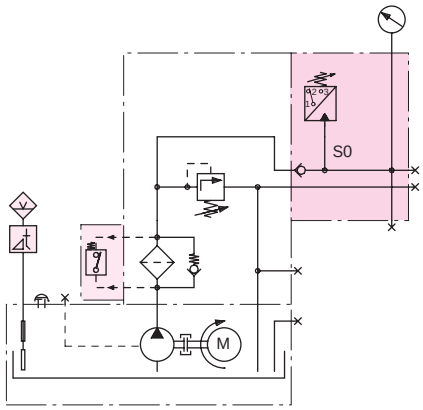

Flow rate ccm/s	Flow rate l/min	Operating pressure at 100% ED[1] bar	Operating pressure at 40% ED bar	Nominal rating kW	L[2] mm	Weight kg	Order no. Basic	Order no. with filter control
15	0,9	350	500	0,75	489	27	**8223-310**	**8223-910**
25	1,5	150	200	0,75	489	27	**8122-300**	**8122-900**
25	1,5	360	500	1,1	504	30	**8223-308**	**8223-908**
86/12	5,2+0,7	100/500	100/500	0,75	489	29	**8223-323**	**8223-923**
41	2,5	220	300	1,1	504	30	**8223-311**	**8223-911**
70	4,5	64	85	0,75	489	27	**8142-300**	**8142-900**
70	4,5	104	142	1,1	504	30	**8143-300**	**8143-900**
70	4,5	142	180	1,5	531	34	**8144-300**	**8144-900**
102	6,2	50	65	0,75	489	27	**8152-300**	**8152-900**
102	6,2	73	100	1,1	504	30	**8153-300**	**8153-900**
102	6,2	100	125	1,5	531	34	**8154-300**	**8154-900**

1) Applies to electric motor only. Running time of pump at max. pressure depends on unit power losses. It should be noted that the oil temperature should not exceed 70°C.
2) The mounting height (dimension L) of the power units depends on the type of motors used.

Stark Spannsysteme GmbH, A-6840 Götzis,
E-mail:verkauf@stark-inc.com, Tel. +43 (0)5523 64739-0, Fax +43 (0)5523 64739-7