ROEMHELD

B 1.7441

Hollow-Piston Cylinder
version with internal thread, single and double acting, max. operating pressure 500 bar

Description

The pistons of this cylinder range are provided with a through hole and internal thread. In connection with a standard tie rod and C-washer combination a variety of applications is possible, see application examples.

The thread in the piston can be drilled out, if required. If the hollow-piston cylinder is mounted onto movable parts, e.g. clamps, the oil has to be supplied through a high-pressure hose.

Important notes

For operating pressures exceeding 350 bar only bolts, studs, or screws of material 10.9 must be used.

It is important to torque the lock nut used sufficiently to prevent damaging the piston threads.

Penetration of aggressive cutting lubricants and coolants through the sintered metal air filter into the cylinder's interior should be avoided by appropriate arrangement or covering.

Operating conditions, tolerances and other data see data sheet A 0.100.

When using single-acting swing clamps, it is absolutely necessary to follow the instructions for venting of the spring area on data sheet A 0.110.

Installation possibilities

1752-004/-023
1754-004/-023
1755-004/-023

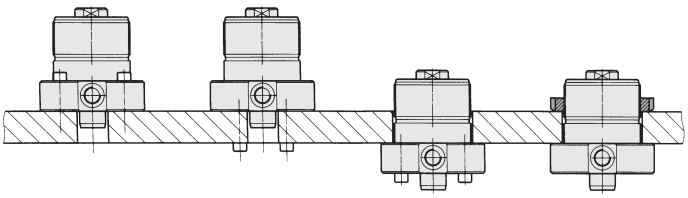

1756-004/-023
1757-004/-023
1758-004/-023

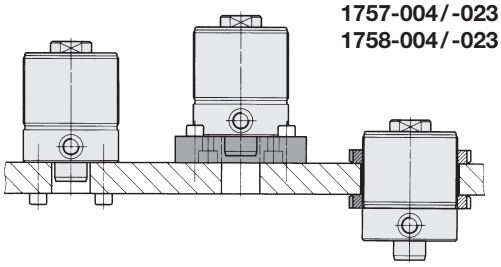

Application examples

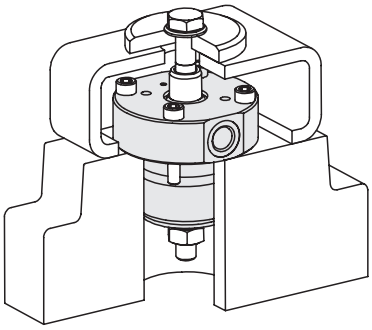

Hollow-piston cylinders in combination with push-pull bolt and „C"-washer can be used advantageously in many cases to clamp workpieces with centre openings.

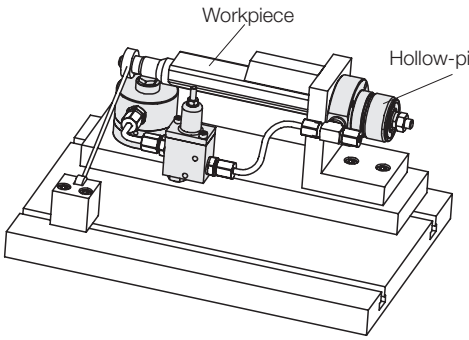

In the shown machine table, the workpiece is additionally supported by means of a work support as per data sheet B 1.913 after clamping with a hollow-piston cylinder in combination with a sequence valve as per data sheet C 2.954.

The support plunger of the work support is retracted in off-position to facilitate workpiece loading. Contact is effected by means of spring force.
The savings in workpiece exchange time, compared to a mechanical clamping system amounts to 58%.

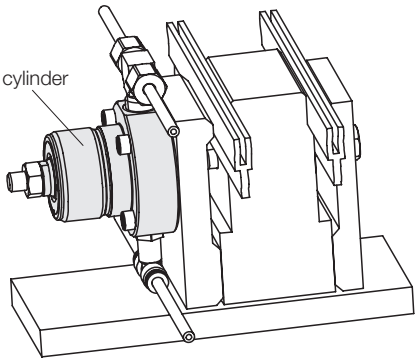

This clamping fixture is for milling operation on a light extruded rail. Workholding by means of hollow-piston cylinders in individual clamping stations mounted on a base plate. Positioning and support of the rail is effected with two longitudinal members matching the cross section of the rail.

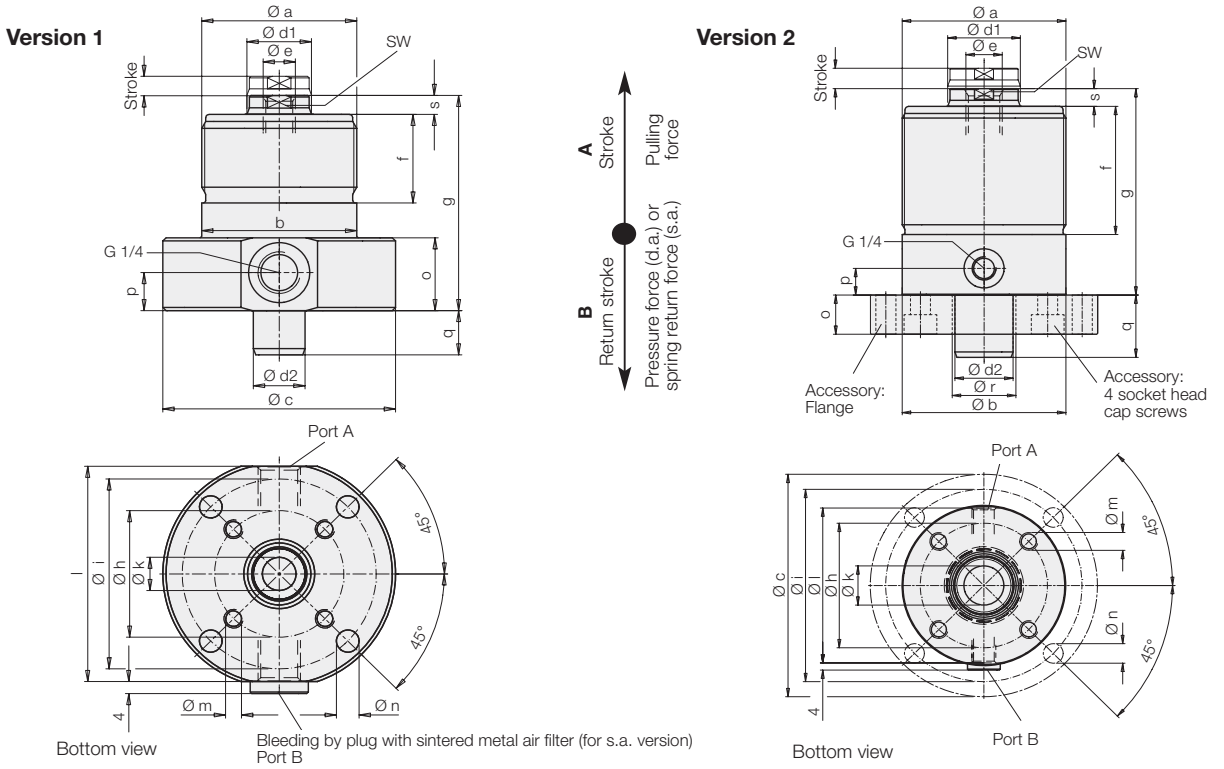

Version		1	1	1	2	2	2
Piston Ø	[mm]	20	32	40	50	63	80
Pulling force 100 bar	[kN]	2	6	9.4	14.7	23.1	37.7
Pulling force 500 bar	[kN]	10	30	47	73.6	115.6	188.5
Pressure force 100 bar (d.a.)	[kN]	2	4.8	7.6	11.9	18.6	30.6
Pressure force 500 bar (d.a.)	[kN]	10	24	38	57.9	93	153
Spring return force (s.a.)	[kN]	0.09	0.2	0.27	0.38	0.47	0.95
Piston area - stroke	[cm²]	2.01	6.03	9.42	14.73	23.13	37.7
Piston area - return stroke	[cm²]	2.01	4.89	7.65	11.58	18.6	30.61
Oil volume per 10 mm stroke	[cm³]	2.01	6.03	9.42	14.73	23.13	37.7
Oil volume per 10 mm return stroke	[cm³]	2.01	4.89	7.65	11.58	18.6	30.61
Ø a	[mm]	M40x1.5	M48x1.5	M60x1.5	M75x1.5	M90x2	M120x2
Ø b	[mm]	–	48	60	75	90	120
Ø c	[mm]	65	72	85	105	125	160
Ø d1	[mm]	12	20	25	32	40	50
Ø d2	[mm]	12	16	20	25	32	40
Ø e x depth of thread	[mm]	M6x8	M10x12	M12x15	M16x20	M20x25	M24x30
f	[mm]	30	28	34	60	72	100
g	[mm]	58	68	80	94	116	137
Ø h	[mm]	30	40	50	60	70	98
Ø i	[mm]	52	60	72	90	108	140
Ø k	[mm]	6.5	10.5	12.5	16.5	21	25
Ø l	[mm]	60	68	82	72	87	117
Ø m x depth of thread	[mm]	M6x8	M6x8	M6x10	M8x10	M10x14	M12x15
Ø n	[mm]	7	7	7	9	11	13.5
o	[mm]	23	23	23	20	22	25
p	[mm]	12	12	12	12	15	15
q	[mm]	12	14	19	23	35	43
Ø r	[mm]	–	–	–	28	35	43
s	[mm]	5	6	7	9	10	10
SW	[mm]	10	17	22	27	36	46
Weight	[kg]	0.8	1.1	1.8	2.5	4.4	9.7
Single acting with spring return							
Stroke	[mm]	6	8	10	12	16	20
Part-No.		**1752-004**	**1754-004**	**1755-004**	**1756-004**	**1757-004**	**1758-004**
Double acting							
Stroke	[mm]	10	12	16	20	32	40
Part-No.		**1752-023**	**1754-023**	**1755-023**	**1756-023**	**1757-023**	**1758-023**
Accessories							
Flange					**3456-310**	**3456-313**	**3456-312**
Socket head cap screw					**3300-237**	**3300-277**	**3300-054**
Groove nut / DIN 1804 / thread		M40x1.5	M48x1.5	M60x1.5	M75x1.5	M90x2	M120x2
Part-No.		**3300-699**	**3300-324**	**3300-411**	**3300-673**	**3300-412**	**3300-134**